OMLED

OMLED One t2

Minimalistic design
Gentle and soft, a light surface made of printed and hardened glass floats in front of an aluminium bar with a satin finish.

High quality material
Satin-finished clear glass as "light medium" lends the luminaire an almost floating appearance in a space.

Excellent light quality
By way of the pure, clear and very natural light of an OLED we achieve an excellent light quality and a very good colour rendering.

Forward-looking technology
The luminaire's glass case is circuit board and control element in one.

Technical data

Colour variants:	white	Art.No.: 199113
	black	Art.No.: 199114
Dimensions(HxWxØ):	478mm x 156mm x 150mm	
Illuminant material:	Glass, Aluminium	
Stand material:	Steel, anodised Aluminium	
Life time:	30,000 h	
Degree of protection:	IP 20	
Dimmable:	Touchdimmer	
Voltage:	24V DC	
Supply voltage:	220–240 V / 50-60 Hz	
Power consumption:	max. 12W	
Energy efficiency class:	A to A++	

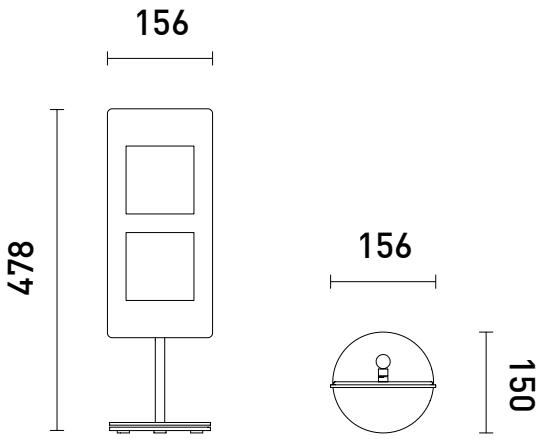

Photometric data

Iluminant:	2x OLED
Colour tempature:	2800 Kelvin
Colour rendering index:	> 80 Ra
Luminous flux:	280 lm
Beam angle:	150°
Lightquality:	UVA & IR free light

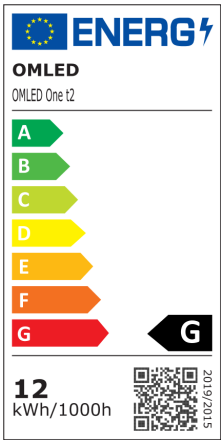

CE

We reserve the right to make technical changes without prior notice.09/2021