OMLED One s2

Minimalistic design
Delicate conductive suspensions serve as the pendant's current-carrying hanger assembly, making the lamp appear to float like a light surface in a room.

High quality material
Satin-finished clear glass as "light medium" lends the luminaire an almost floating appearance in a space.

Excellent light quality
By way of the pure, clear and very natural light of an OLED we achieve an excellent light quality and a very good colour rendering.

Forward-looking technology
The luminaire's glass case is circuit board and control element in one.

Technical data

Colour variants:	white	Art.No.: 199091
	black	Art.No.: 199092
Dimensions(LxWxH):	341mm x 156mm x 8mm	
Illuminant Material:	Glass, Steel	
Canopy material:	Steel, Aluminium (white)	
Life time:	30,000 h	
Degree of protection:	IP 20	
Dimmable:	Touchdimmer	
Voltage:	24V DC	
Supply voltage:	220–240 V / 50-60 Hz	
Power consumption:	max. 12W	
Energy efficiency class:	A to A++	

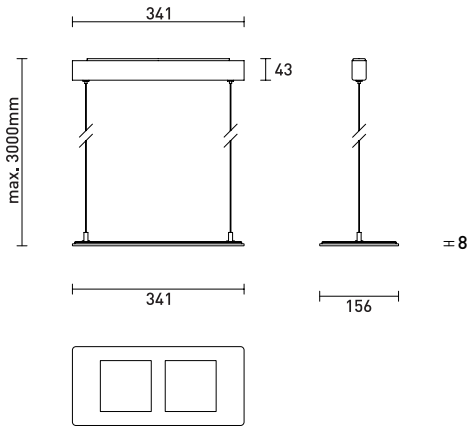

Photometric data

Iluminant:	2x OLED
Colour tempature:	2800 Kelvin
Colour rendering index:	> 80 Ra
Luminous flux:	280 lm
Beam angle:	150°
Lightquality:	UVA- & IR-free light

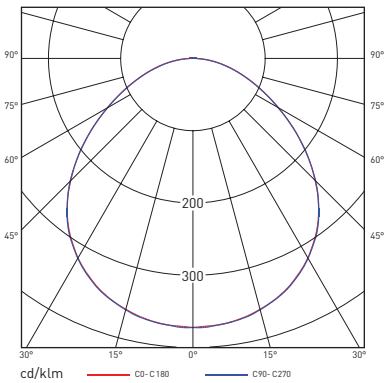

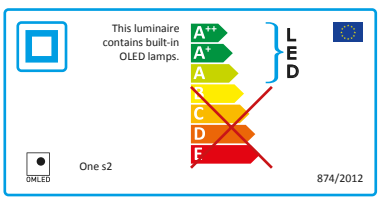

We reserve the right to make technical changes without prior notice.02/2021